Operating instructions

TARAtec sensors

P9

CD10, P10, OZ10, WP10, CH10

November 2019 (EN)
V2

Table of contents

1 Information about these operating instructions....4

1.1 Symbols and displays 4
1.2 Associated documents 5

2 Information on this product....6

2.1 Product description 6
2.2 Scope of supply 8
2.3 Product overview 9
2.4 Name plate 10

3 Safety 11

3.1 Use for the intended purpose 11
3.2 Use other than for the intended purpose....11
3.3 Personal qualifications 12
3.4 Rebuilding and modifications....12
3.5 Residual risks 12

4 Commissioning....16

4.1 Installation requirements 16
4.2 Preparation of the sensors 16
4.3 Insertion into the flow chamber....19
4.4 Electrical connection 20
4.5 Initial calibration 22

5 Calibration....23

6 Removal 25

7 Maintenance 26

7.1 Maintenance overview 26

7.2 Changing the electrolyte and membrane cap 26

8 Troubleshooting 28

8.1 Fault overview 29

8.2 Special checks 36

9 Technical data 39

10 Deinstallation and storage 39

11 Disposal 39

12 Warranty 40

13 Liability disclaimer 40

14 Appendix 41

1 Information about these operating instructions

1.1 Symbols and displays

1.1.1 Safety and warning instructions

The hazard symbols and signal words listed below are used in these operating instructions. They help you use the product safely, protect the operating personnel against injuries and protect the operating company against damage to property and additional costs.

	Signal word	Meaning
⚠	**DANGER!**	DANGER means a hazard with a high degree of risk which if not avoided will lead to death or serious injury.
⚠	**WARNING!**	WARNING means a hazard with a medium degree of risk which if not avoided may lead to death or serious injury.
⚠	**CAUTION!**	CAUTION means a hazard with a low degree of risk which if not avoided may lead to minor or moderate injury.
	NOTE	NOTE warns against damage to property.

Tab. 1: Signal words

1.1.2 Labels in the text

Symbol	Meaning
⚠	This symbol is the general warning symbol and warns you about risks of injury. Take all the actions that are indicated by this warning symbol.
ℹ	This symbol indicates tips and helpful information for optimum and economic use of the product.
▶	This symbol indicates actions to be performed by the personnel.
➥	This symbol indicates the result of an action.
•	This symbol indicates individual bullet points.
✓	This symbol indicates a precondition before performing an action.

Tab. 2: Symbols in the text

1.2 Associated documents

Data sheets on the individual types of sensors can be found at the following Internet address:
http://www.reiss-gmbh.com/english/datasheets.htm

2 Information on this product

2.1 Product description

The TARAtec 9/10 product range consists of sensors with covering membranes.
They are 2-electrode systems for measuring the concentrations in water of the disinfectants chlorine[1], chlorine dioxide, ozone, peracetic acid or hydrogen peroxide. In comparison to the product range TARAtec 7 the TARAtec 9/10 sensors are characterised by improved resistance to media for reducing surface tension (tensides). In addition, TARAtec 9 sensors can be used when the water being measured is at high temperatures. The area of application of these sensors extends to almost all water qualities.
The sensors are not suitable for checking the absence of chlorine, chlorine dioxide, ozone, peracetic acid or hydrogen peroxide.

A complete measuring and/or control system normally consists of the following components:

- Sensor
- Electrical leads and connectors
- Flow chambers and connections
- Measuring and control device
- Dosing equipment
- Analytical equipment

These operating instructions relate exclusively to the sensor.

▷ Comply with the operating instructions for the peripheral devices.

[1] Free chlorine (dependent on the pH value)

2.1.1 Chlorine dioxide CD10

The sensor measures the concentration of chlorine dioxide in the water being measured. Such chlorine dioxide arises from the application of chlorine dioxide (such as the acid/chlorite process, chlorine/chlorite process). The chlorine dioxide sensor is insensitive to chlorine.

2.1.2 Peracetic acid P9 and P10

The sensor measures the concentration of peracetic acid in the water being measured resulting from the application of peracetic acid.

2.1.3 Ozone OZ10

The sensor measures the concentration of dissolved ozone in the water being measured. The sensor is virtually insensitive to chlorine.

2.1.4 Hydrogen peroxide WP10

The sensor measures the concentration of hydrogen peroxide in the water being measured resulting from the application of hydrogen peroxide.

2.1.5 Chlorine CH10

The sensor measures the concentration of free chlorine in the water being measured. Such chlorine arises from the application of inorganic chlorine products (such as chlorine gas, sodium hypochlorite solution, calcium hypochlorite solution).
The sensor can be used in the pH range from pH 5.0 to pH 8.0. It is essential to keep the pH value at a constant level, since the sensor signal tracks the dissociation curve of the hypochlorous acid. The sensor shows different chlorine values different values depending on the pH value although no change in the chlorine concentration can be recognised in the DPD-1 measuring values or iodometric measuring values.
When organic chlorine products or chlorine stabilisers are used, both based on (iso) cyanuric acid as a rule, there may be considerable differences between the DPD-1 measuring value or iodometric measuring value and the signal of the chlorine sensor.

2.2 Scope of supply

- Keep the all the packaging for the sensor.
- In the event of repair or warranty please return the sensor in the original packaging.
- Check that the delivery is complete and undamaged.

If it is damaged:

- Please contact your supplier.

Component	Quantity	Sensor with voltage output signal (0…+/-2000 mV)	Sensor with 4 - 20 mA current loop output signal (2-pole screw terminal connection)	Sensor with 4 - 20 mA current loop output signal (5-pole-M12-connection)	Sensor with Modbus signal transmission
Sensor with membrane cap (depending on the type)	1	✓	✓	✓	✓
G-holder	1	✓	✓	✓	✓
Electrolyte (depending on the type)	1 bottle	✓	✓	✓	✓
Tweezers	1	✓	✓	✓	✓
mA hood with O-ring 20x1.5	1	–	✓	–	–
Special emery paper (depending on the type)	1	✓	✓	✓	✓
Operating instructions	1	✓	✓	✓	✓

Tab. 3: Scope of supply

2.3 Product overview

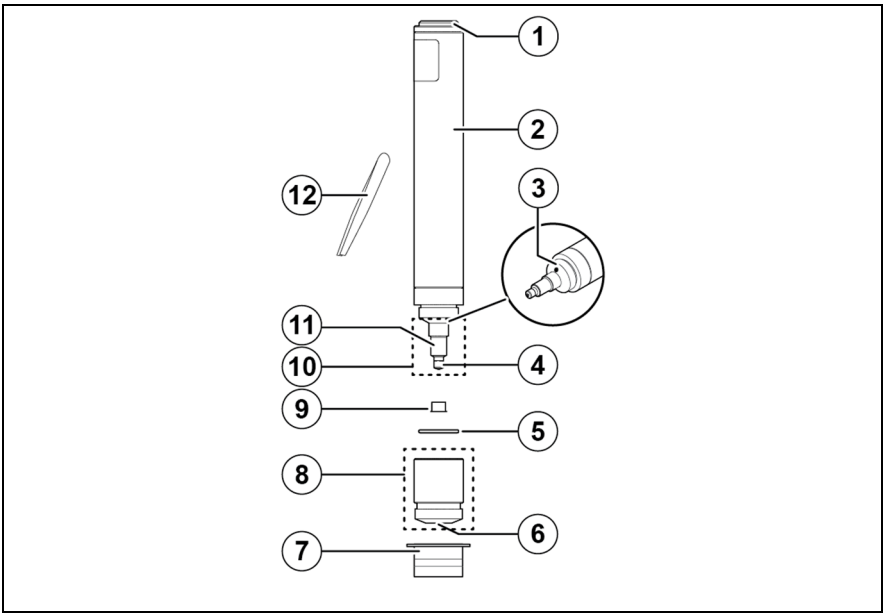

Fig. 1: Product overview

1 Electrical connection
2 Sensor body
3 Pressure compensation opening
4 Working electrode
5 O-ring 20 x 1.5
6 Membrane disc
7 Protective cap
8 Membrane cap
9 G-holder
10 Electrode finger
11 Reference electrode
12 Tweezers

2.4 Name plate

A name plate is glued to each sensor, this shows the following information:

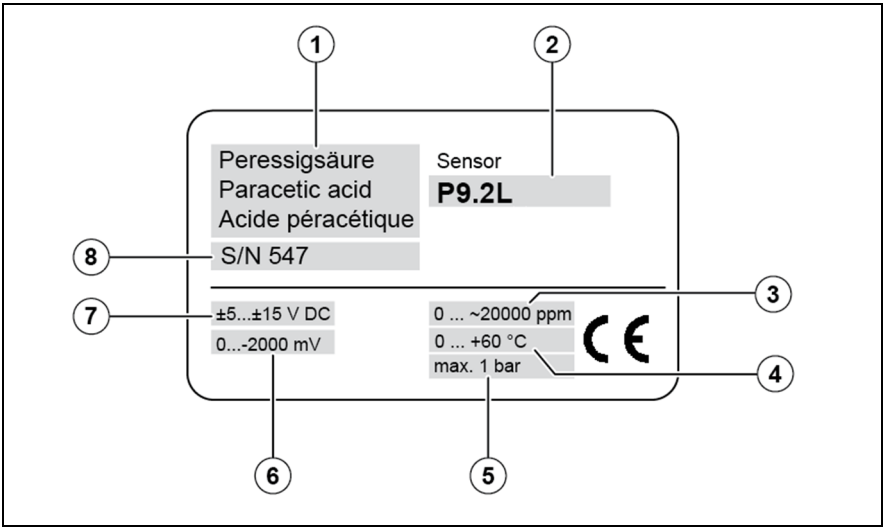

Fig. 2: Example of a name plate

1 Measured variables
2 Sensor designation, sensor name
3 Nominal measuring range of the sensor
4 Permissible temperature range of the measuring water
5 Maximum permissible pressure of the water being measured
6 Signal transmission
7 Power supply
8 Serial number

3 Safety

The sensor is manufactured using the latest technology.
Nevertheless, improper use can give rise to the following risks:

- Effects on health
- Falsification of measured values, which can lead to dangerous dosing of incorrect quantities of the disinfectant.

▶ Comply with the safety instructions in these operating instructions.

3.1 Use for the intended purpose

The sensor is intended to be used for measuring the concentration of a specific disinfectant in water.
The sensor may be used only under the following conditions:

- For the disinfectant specified in the respective data sheet
- Under the conditions of use specified on the respective data sheet
- Upright installation in a suitable flow chamber
- Restricted to the activities described in these operating instructions.
- Use only when in fault-free condition
- Use of original accessories and spare parts (see http://www.reiss-gmbh.com/english/datasheets.htm)

3.2 Use other than for the intended purpose

The sensor may not be used for measurements to demonstrate the absence of the disinfectant.

3.3 Personal qualifications

The user must hold the following personal qualifications:

- He must have read and understood the operating instructions.
- He must have received training in the handling of the sensor.

3.4 Rebuilding and modifications

Opening the sensor and making modifications to it which can affect the safety and functionality of the sensor may be performed only by the manufacturer.

3.5 Residual risks

3.5.1 Slippage of the sensor

If the sensor is inadequately secured, it may become loose due to the pressure of the water or due to vibration. This results in the following risks:

- Due to the pressure of the water the sensor may slip out of the flow chamber.
- The sensor may slip down into the flow chamber due to its own weight.

▶ Depending on recommendation in the data sheet, use a variant with a retaining ring (see section 1.2, p. 5).

▶ Make sure that the screw fastening cannot come loose during operation.

▶ Check the sensor regularly for secure attachment.

3.5.2 Water pressure that is high or fluctuating

The membrane may be damaged if the water pressure exceeds the maximum permissible value, or if the water pressure fluctuates greatly.

▶ Comply with the permissible pressure stated on the data sheet (see section 1.2, p. 5).

▶ Keep the pressure constant.

3.5.3 Impacts, shocks and improper touching

Impacts or shaking of the sensor, such as by dropping it, can damage it.

- ▶ Avoid impacts and shocks.
- ▶ Do not allow the sensor to be dropped.

Touching the reference electrode, or using emery paper on it, can damage it.

- ▶ Do not touch the reference electrode.
- ▶ Should it be necessary for maintenance work, only emery the working electrode, **not** the reference electrode.

3.5.4 Defective membrane cap

It the pressure compensation opening is full, this can damage the membrane beyond repair.

- ▶ Empty the pressure compensation opening (see section 7.2, p. 26).

3.5.5 Electrical interference

A lack of galvanic isolation can falsify the measured value and even damage the sensor beyond repair.

- ▶ Ensure the electrical connection has galvanic isolation.

Electrical interference on the signal lead can damage the electronics.

- ▶ Ensure the connection is made correctly.

3.5.6 Lack of disinfectant

If for a prolonged period there is no disinfectant in the water, a film of biological matter can accumulate on the membrane. This makes the measured value incorrect, and means the membrane cap can no longer be used.

- ▶ Make sure that the period during which there is no disinfectant present is not longer than specified on the data sheet (see section 1.2, p. 5).

3.5.7 Loss of measured values when the sensor is removed

After the sensor has been removed there is no longer a measured value, which can lead to incorrect dosing of the disinfectant.

- Switch off the measurement and control system or switch it over to manual operation.

3.5.8 Oxidant

Oxidants in the water interfere with measurement and can lead to measuring errors.

- Make sure there are no disruptive oxidants in the water.
- Comply with the instructions on the data sheet (see section 1.2, p. 5).

3.5.9 Temperature and fluctuations in temperature

If the ambient temperature or the temperature of the medium lies outside the permissible range, the sensor and the electrolyte may be damaged.

- Make sure that at all stages of the operation the permissible temperature ranges as per the data sheet are adhered to (see section 1.2, p. 5).

The measured value may be incorrect if the temperature in the medium fluctuates abruptly.

- Make sure that the temperature in the water changes only slowly.

3.5.10 Impermissible installation position

If the sensor is not installed upright the measured value can be falsified.

- Install the sensor upright.

3.5.11 Fluctuations in the light intensity (only WP10)

Wide fluctuations in the ambient light intensity can falsify the measured value.

If wide fluctuations in the light intensity are anticipated:

- Screen the flow chamber.

3.5.12 Incorrect chemical analytical methods

Incorrect determination of the concentration of the disinfectant will lead to incorrect calibration of the sensor.

- Observe the recommended analysis methods as per the data sheet (see section 1.2, p. 5).
- Perform analytical work in accordance with the specifications in the manufacturer’s operating instructions for the analytical equipment.

4 Commissioning

4.1 Installation requirements

The following installation requirements must be satisfied:

- Continuous power supply and presence of water being measured
- Flow rate as specified on the data sheet
- Constant through flow rate
- There must be disinfectants present in the water being measured.
- Galvanic separation of the electrical connection (if not present in the sensor, see data sheet, section 1.2, p. 5)
- Make sure that the measuring water does not evolve gas at the measurement point.

4.2 Preparation of the sensors

▶ Pull the protective cap [3] off the membrane cap [2].
▶ Unscrew the membrane cap [2] from the sensor body [1].

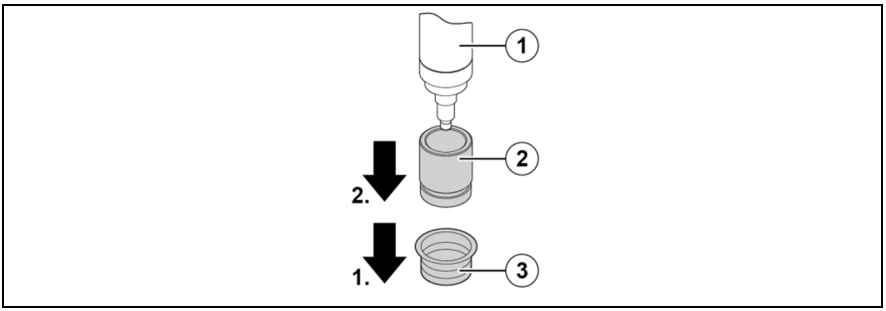

Fig. 3: Unscrewing the membrane cap

1 Sensor body
2 Membrane cap
3 Protective cap

- ▶ Put down the membrane cap on a clean surface.
- ▶ Fill the membrane cap with electrolyte to the brim.

Fig. 4: Filling the membrane cap

- ▶ Place the G-holder on a clean surface with the fabric facing downwards.
- ▶ Wet the G-holder with electrolyte.

Fig. 5: Wetting the G-holder

- ▶ Grip the G-holder [2] with the tweezers [1], with the fabric facing downwards.
- ▶ Place the G-holder centrally on membrane in the membrane cap [3].

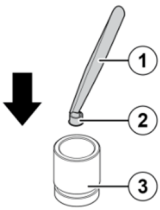

Fig. 6: Placing the G-holder in the membrane cap

1 Tweezers
2 G-holder
3 Membrane cap

- ▶ Carefully withdraw the tweezers from the membrane cap.
- ➥ The G-holder is now positioned in the membrane cap.
- ▶ Place the sensor body [1] upright on the membrane cap [2].
- ▶ Rotate the sensor body anticlockwise until the thread is felt to engage.

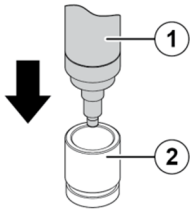

Fig. 7: Placing the sensor body on the sensor cap

1 Sensor body
2 Membrane cap

- ▶ Slowly screw the sensor body into the membrane cap.

▷ Make sure that the membrane cap is fully screwed into the sensor body, right up to the stop.

- ✓ Once the membrane cap has been fully screwed on:
- ▶ Neither touch nor strike the membrane.
- ▶ Use mains water to rinse off any electrolyte residues adhering to the sensor.
- ➥ The sensor is now prepared for commissioning.

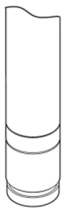

Fig. 8: Prepared sensor

4.3 Insertion into the flow chamber

✓ The sensor must have been prepared for installation (see section 4.2, p. 16).

▶ Insert the sensor into a flow chamber of the type TARAflow FLC or any other suitable flow chamber.

In order to insert the sensor correctly into the flow chamber:

▶ Comply with the instructions in the operating instructions for the flow chamber that is used.

4.4 Electrical connection

✓ The sensor is inserted into the flow chamber (see section 4.3, p. 19).
The following types of electrical connections to the sensor are available:

4.4.1 Connection with 0…+/-2000-mV signal output

The sensor is provided with a 4-pin socket protected against polarity reversal. The power supply is symmetrical or unipolar. The connection pins are assigned as follows:

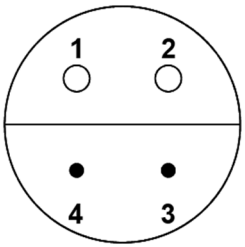

Fig. 9: Connection pin assignment (4-pin)

1 Socket, +U
2 Socket, -U or power GND
3 PIN, earth or signal GND
4 PIN, measuring signal

4.4.2 Connection with 4…20 mA signal output

M12 screwed plug

The sensor is provided with a 5-pin M12 screwed plug protected against polarity reversal.
The connection pins are assigned as follows:

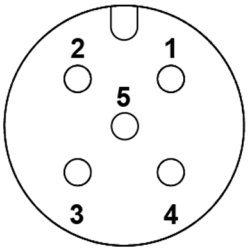

Fig. 10: Connection pin assignment (5-pin)

1 (not assigned)
2 +U
3 -U
4 (not assigned)
5 (not assigned)

Connection with a 2-pole screwed terminal block

The sensor is provided with a 2-pole screwed terminal block.

- ▶ Insert the sensor cable through the cable gland of the hood.
- ▶ Connect the cores to the terminals in the sensor electronics.
- ▶ Screw the hood finger-tight into the sensor body until the O-ring seal is made.
- ▶ Tighten the cable gland so as to secure the cable.

4.4.3 Connection with Modbus signal transmission

The sensor is provided with a 5-pin M12 screwed plug protected against polarity reversal. There are no termination resistors within the sensor. The connection pins are assigned as follows:

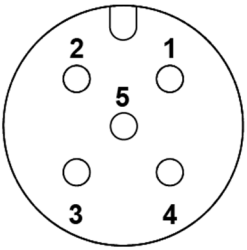

Fig. 11: Connection pin assignment (5-pin)

1 (not assigned)
2 +9…+30 V
3 GND
4 RS485 B
5 RS485 A

4.5 Initial calibration

✓ The sensor must have been connected electrically (see section 4.4, p. 20).
✓ The run-in time has been complied with as per the data sheet (see section 1.2, p. 5).
▶ Perform calibration (see section 5, p. 23).
▶ After one day, repeat the calibration.

5 Calibration

The sensor outputs a signal proportional to the concentration of the disinfectant in the water being measured. In order to assign the value of the sensor signal to the concentration of the disinfectant in the water being measured, the sensor must be calibrated.

- ✓ The flow rate must be constant.
- ✓ The temperature of the water being measured must be constant.
- ✓ Acclimatisation of the temperature of the sensor to that of the water being measured must be complete (this takes about 20 minutes after a change in temperature).
- ✓ The sensor must have completed running in.
- ✓ No other oxidant may be present in the water being measured.
- ▶ Take the analytical sample of the water being measured from near to the sensor.
- ▶ Using appropriate methods, determine the concentration of the disinfectant in the measuring water (see the manufacturer's operating instructions for the analytical equipment).
- ▶ In the calibration menu of the measuring and control device, mark up the sensor signal against the value determined by the analytical procedure (see the operating instructions for the device).
- ▶ Repeat the calibration at regular intervals (see section 7.1, p. 26).
- ▶ Comply with the applicable national regulations for calibration intervals.

Measured variables	Recommended analytical methods	
Chlorine dioxide	DPD-1	Photometer for chlorine dioxide
Ozone	DPD-1 + DPD-3	Photometer for ozone
	DPD-4	
Hydrogen peroxide	Single-stage sulphuric acid titration with potassium permanganate (for the procedure see appendix)	
Peracetic acid	Two-stage sulphuric acid titration with potassium permanganate and sodium thiosulphate (for the procedure see appendix)	
Chlorine	DPD-1	Up to 10 ppm: Photometer for chlorine
	Iodometry	Up to 200 ppm: Photometer for chlorine
		Up to 2000 ppm titration with sodium thiosulphate

Tab. 4: Recommended analytical methods

Chlorine dioxide can also be determined using a photometer intended for chlorine. The result must be multiplied by a factor of 1.9.
Ozone can also be determined using a photometer intended for chlorine. The result must be multiplied by a factor of 0.68.
At higher concentrations of disinfectant the DPD colouration may fail to appear.

6 Removal

Removal of the sensor can lead to an incorrect measured value at the input to the measuring and control device, which can cause the control circuit to apply uncontrolled dosing.

Before removing the sensor:

- ▶ Switch off the measurement and control system or switch it over to manual operation.
- ▶ Close the inlet of the water being measured.
- ▶ Close the outlet of the water being measured.
- ▶ Remove the electrical connection.

To disconnect a sensor with a 2-pole screwed terminal block:

- ▶ Undo the cable gland.
- ➥ The cable is now free to move.
- ▶ Unscrew the hood with the cable gland from the sensor.
- ▶ Release the cable cores from the terminals.

- ▶ Undo the screw fastening and carefully pull the sensor out.

7 Maintenance

7.1 Maintenance overview

To ensure optimum performance of the sensor:

▶ Perform the following actions at regular intervals.

Maintenance task	Interval
▶ Change the electrolyte	3-6 months
▶ Change the membrane cap	Annually
▶ Perform calibration	• Weekly • After the electrolyte and/or the membrane cap has been changed

Tab. 5: Maintenance overview

7.2 Changing the electrolyte and membrane cap

▶ Unscrew the membrane cap.
▶ Using tweezers, remove the G-holder from the membrane cap.
▶ Empty the electrolyte out of the membrane cap.
▶ Rinse the electrode finger with mains water.
▶ Shake the sensor body dry several times (see Fig. 12, p. 25).
➥ This empties the pressure compensation opening [1].

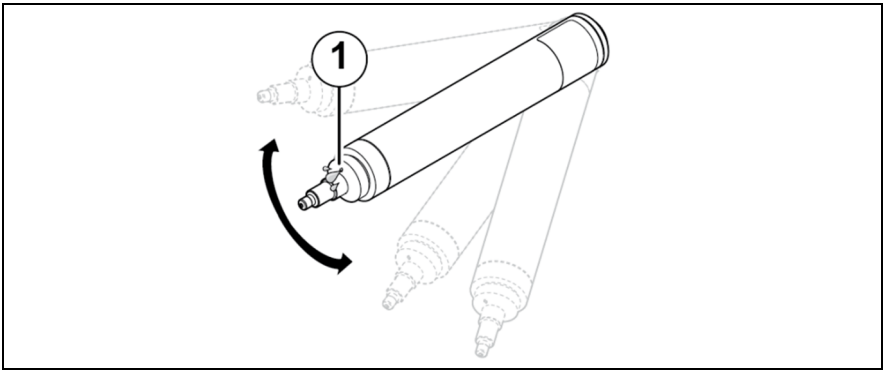

Fig. 12: Shaking the sensor body dry

1 Pressure compensation opening

- ▶ Lay a piece of special emery paper on a paper wipe.
- ▶ Hold the sensor upright.
- ▶ Hold the special emery paper in place and move the tip of the working electrode over it at least twice. Use a fresh area of the emery paper for each pass.

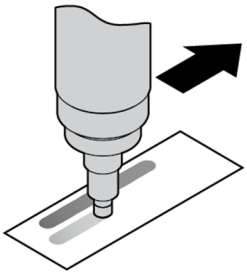

Fig. 13: Emerying the working electrode

When changing the membrane cap:

▷ Use a new membrane cap.

- ▶ Perform the same operations as for commissioning (see section 4.2, p. 16).

➥ Maintenance has now been completed and the sensor can be put back into use.

8 Troubleshooting

Various factors in the environment can affect the sensor. If irregularities occur, it may be useful to check these factors:

- Flow rate
- Measuring cable
- Measuring and control device
- Calibration
- Dosing equipment
- Concentration of the disinfectant in the dosing container
- Suitability of the sensor for measuring the disinfectant that is being dosed
- Concentration of the disinfectant in the water being measured (determined by analytical methods)
- pH value of the water being measured
- Temperature of the water being measured
- Pressure in the flow chamber
- Analytical methods

8.1 Fault overview

Fault	Cause	Corrective action
Sensor cannot be calibrated / the measured value deviates from the analytical measurement	Run-in time too short.	▶ Wait until the run-in time has elapsed (see section 4.5, p. 22).
	Membrane torn.	▶ Change the membrane cap (see section 7.2, p. 26).
	Membrane cap damaged.	▶ Change the membrane cap (see section 7.2, p. 26).
	Disruptive substances in the water contents	▶ Check the water for disruptive substances and remedies. ▶ Consult the supplier.
	Short circuit / defect in the measuring lead	▶ Locate and eliminate the short circuit / defect. ▶ Exchange the measuring lead.
	Distance between working electrode and membrane is too great.	▶ Screw the membrane cap on fully to the stop.
	The DPD/titration chemicals are out of date.	▶ Use fresh DPD/titration chemicals. ▶ Repeat the calibration (see section 5, p. 23).

Fault	Cause	Corrective action
	Unsuitable titration method[2]	▶ Repeat the titration using a suitable method (see appendix, p. 41).
	Deposits on the membrane	▶ Change the membrane cap (see section 7.2, p. 26).
	Air pockets between the G-holder/membrane/ working electrode	▶ Unscrew the membrane cap. ▶ Using tweezers, remove the G-holder from the membrane cap. ▶ Repeat commissioning (see section 4.2, p. 16).
	Gas bubbles on the outside face of the membrane	▶ Temporarily increase the flow rate. ▶ Check the installation and modify it.
	No electrolyte in the membrane cap	▶ Fill the membrane cap with electrolyte. ▶ Prepare the sensor (see section 4.2, p. 16).
	The concentration of disinfectant exceeds the upper limit of the measuring range.	▶ Check the system. ▶ Remedy the faults. ▶ Repeat the calibration (see section 5, p. 23).

[2] Suitable only for peracetic acid/hydrogen peroxide

Fault	Cause	Corrective action
	Lack of galvanic isolation	▶ Create galvanic isolation. ▶ Return the sensor to the supplier for checking / reconditioning.
	The sensor is defective.	▶ Return the sensor to the supplier for checking / reconditioning.
Unstable measured value	Membrane torn.	▶ Change the membrane cap (see section 7.2, p. 26).
	Air pockets between the G-holder/membrane/ working electrode	▶ Unscrew the membrane cap. ▶ Using tweezers, remove the G-holder from the membrane cap. ▶ Repeat commissioning (see section 4.2, p. 16).
	Gas bubbles on the outside face of the membrane	▶ Temporarily increase the flow rate. ▶ Check the installation and modify it.
	Pressure fluctuations in the measuring water	▶ Check the type of installation and modify it.

Fault	Cause	Corrective action
	Lack of galvanic isolation	▶ Create galvanic isolation. ▶ Return the sensor to the supplier for checking / reconditioning.
	The reference electrode is exhausted and/or contaminated.[3]	▶ Return the sensor to the supplier for checking / reconditioning.
Overdriving[4]	Excessive concentration of disinfectant in the measuring water	▶ Check the system. ▶ Remedy the faults. ▶ Calibrate the sensor (see section 5, p. 23). ▶ Perform maintenance on the sensor (see section 7, p. 26).
	Run-in time too short.	▶ Wait until the run-in time has elapsed (see section 4.5, p. 22).
	The membrane is damaged.	▶ Change the membrane cap (see section 7.2, p. 26).
	Flow rate too high	▶ Check the system. ▶ Reduce the flow rate.

[3] The reference electrode has a silvery sheen or is white. The usual colour on the other hand is brown/grey.
[4] See Tab. 7, p. 34

Fault	Cause	Corrective action
	Lack of galvanic isolation	▶ Create galvanic isolation. ▶ Return the sensor to the supplier for checking / reconditioning.
	The sensor is defective.	▶ Return the sensor to the supplier for checking / reconditioning.
Underdriving[5]	Run-in time too short.	▶ Wait until the run-in time has elapsed (see section 4.5, p. 22).
	The working electrode is contaminated.	▶ Perform maintenance on the sensor (see section 7, p. 26).
	Lack of galvanic isolation	▶ Create galvanic isolation. ▶ Return the sensor to the supplier for checking / reconditioning.
	The sensor is defective.	▶ Return the sensor to the supplier for checking / reconditioning.
Green LED flickering or failing to light up[6]	Defective Power supply	▶ Provide the correct power supply.

[5] See Tab. 7, p. 34
[6] Only for sensors with digital electronics

Fault	Cause	Corrective action
	The sensor is defective.	▶ Return the sensor to the supplier for checking / reconditioning.
No signal	The sensor is connected to the measuring and control device with the wrong polarity.[7]	▶ Connect the sensor correctly to the measuring and control device.
	The measuring lead is broken.	▶ Exchange the measuring lead.
	The sensor is not receiving any power supply.	▶ Provide the correct power supply.
	The sensor is defective.	▶ Return the sensor to the supplier for checking / reconditioning.

Tab. 6: Faults overview

Electronics	Signal transmission	Underdriving	Overdriving
Analogue	4 … 20 mA	<4 mA	>20 mA
	0 … +2000 mV	<0 mV	>+2000 mV
	0 … -2000 mV	>0 mV	<-2000 mV

[7] Only for sensors with 4…20-mA signal output

Electronics	Signal transmission	Underdriving	Overdriving
Digital	Modbus RTU	<0 ppm/ % <0 mA	Measured value > Measurement range
	0 … +2000 mV	Orange LED lights up[8]	• >+2000 mV • Orange LED flashes regularly
	0 … -2000 mV	Orange LED lights up[7]	• <-2000 mV • Orange LED flashes regularly

Tab. 7: Output signal of the sensor when overdriven/underdriven

[8] The displayed output signal must be multiplied by a factor of -1.

8.2 Special checks

8.2.1 Tightness of the membrane cap

- ▶ Unscrew the membrane cap from the sensor (see section 7, p. 26).
- ▶ Dry the outside of the membrane cap.
- ▶ Prepare the membrane cap (see section 4.2, p. 16).
- ▶ When screwing the membrane cap on, watch out for liquid escaping through the membrane.

If liquid does escape through the membrane:

- ▶ Use a new membrane cap.

If the sensor does not respond:

- ▶ Return the sensor to the supplier for checking.

8.2.2 Electronics

- ▶ Unscrew the membrane cap.
- ▶ Rinse the electrode finger with mains water.
- ▶ Using a clean cloth, carefully dry the electrode finger.
- ▶ Connect the sensor to the measuring and control device.
- ▶ Connect a suitable measuring device to the original sensor signal.
- ▶ Wait five minutes.
- ▶ Read the original sensor signal at the measuring device.
- ▶ Mark up the values that were read against the following target values:

- Sensor (mV): approx. +/- 0 mV
- Sensor (mA): approx. 4 mA
- Sensor (Modbus): approx. 0 ppm or 0%

If the sensor signal approximately corresponds to the aforementioned value, the electronics can be provisionally regarded as OK.

If the measured value deviates significantly from the above value:

- ▶ Return the sensor to the supplier for checking.

8.2.3 Checking the zero point

✓ The electronics must have been tested and found to be OK.

▶ Prepare the sensor (see section 4.2, p. 16).

▶ Connect the sensor to the measuring and control device.

▶ Fill a glass beaker with mains water (without any disinfectant!).

▶ Stir the sensor round in the glass beaker for 30 seconds.

▶ Carefully put the sensor down obliquely in the glass beaker.

▶ Wait 30 minutes.

▶ Read the measured value.

If the measured value is close to the value 0, the zero point can provisionally be regarded as OK.

If the measured value deviates significantly from zero:

▶ Perform maintenance on the sensor (see section 7, p. 26) and repeat the zero point test.

A freshly cleaned working electrode has a relatively high zero point. The sensor takes a few days to settle back to its lowest zero point.

If after maintenance has been performed on the sensor measured value is not close to zero:

▶ Return the sensor to the supplier for checking.

➥ This completes the zero point checking.

8.2.4 Signal

✓ The zero point checking must have been performed successfully.

▶ Add the relevant disinfectant to the mains water in the glass beaker (see section 8.2.3, p. 37).

▶ Stir the sensor steadily round in the glass beaker for five minutes.

▶ Monitor the measured value throughout this time.

If the measured value increases, the sensor can provisionally be regarded as OK.

If the measured value does not change:

▶ Perform maintenance on the sensor (see section 7, p. 26) and repeat the signal test.

➥ This completes the signal test. The sensor can be put back into use.

If after maintenance the sensor shows no response to the disinfectant:

▶ Return the sensor to the supplier for checking.

9 Technical data

Information on the technical data can be found at the following Internet address:
http://www.reiss-gmbh.com/english/datasheets.htm

10 Deinstallation and storage

To deinstall a sensor and prepare it for storage, proceed as follows:

- ▶ Unscrew the membrane cap.
- ▶ Using tweezers, remove the G-holder from the membrane cap.
- ▶ Rinse out the G-holder with mains water.
- ▶ Use mains water to rinse the electrolyte out of the membrane cap.
- ▶ Shake the sensor body dry several times (see Fig. 12, p. 25).
- ▶ Rinse the electrode finger with mains water.
- ▶ Dry the membrane cap, G-holder and sensor body in a dust-free place.
- ▶ For protection, loosely screw the dry membrane cap onto the sensor body.
- ▶ Make sure that the membrane is not lying in contact with the working electrode.

▷ Store G-holder in original packaging.

If the membrane cap has been in use for one day or longer we recommend that it is not used when the sensor is recommissioned.

▷ Perform a change of membrane cap (see section 7.2, p. 26).

11 Disposal

- ▶ Comply with the local regulations on disposal.

12 Warranty

We grant a manufacturer's warranty of two years on the sensor body and the electronics, subject to correct handling. The warranty does not apply to the membrane cap (wearing part), electrolyte (expendable material) and service work to be performed (cleaning the parts in contact with the electrolyte, renewing the reference electrode and cleaning the electrode tip with fine grade emery paper). If there is mechanical damage or the serial number is illegible, the warranty becomes void.

Returning a sensor for checking/reconditioning:

Shipments will be accepted only if they are returned carriage paid. Otherwise they will be returned to the sender.

On checked/reconditioned sensors we grant a warranty of one year from the date of checking/reconditioning. The warranty is on the electrode body and the electronics, subject to correct handling.
If there is mechanical damage or the serial number is illegible, this warranty becomes void.

13 Liability disclaimer

The sensor is manufactured with great care and is subjected to a documented function test. Should any malfunctions occur in the sensor despite this, no liability claims may be lodged against the manufacturer for damages resulting from this malfunction.

14 Appendix

Recommended titration procedure

For the determination of hydrogen peroxide (H_2O_2), only the 1st titration stage need to be performed.
For the determination of peracetic acid (PAA) the 1st and 2nd titration stages need to be performed.

Procedure:

- The titration must be performed quickly.
- After the first addition of potassium permanganate it may take a few seconds before the sample shows colour.
- Renewed colouration of the sample after completion of the 2nd titration stage is disregarded.
- In the 1st titration stage, take care to avoid a large excess of potassium permanganate (intense violet colouration of the sample).

In the 2nd titration stage the potassium permanganate will be codetermined as peracetic acid and thus falsifies the results.

	H_2O_2 **Peracetic acid**	**H_2O_2** **Peracetic acid**	**H_2O_2** **Peracetic acid**
Concentration range in ppm	0…200	>200…2000	>2000…20000 (2%)
Material	• 25 ml sample of the water being measured • Sulphuric acid (25%) • Potassium permanganate (0.01 n) • Potassium iodide 0.3-0.5 g (powder) • Thiosulphate (0.01 n) • Starch solution (1%)	• 25 ml sample of the water being measured • Sulphuric acid (25%) • Potassium permanganate (0.1 n) • Potassium iodide 0.3-0.5 g (powder) • Thiosulphate (0.1 n) • Starch solution (1%)	• 5 ml sample of the water being measured • Sulphuric acid (25%) • Potassium permanganate (0.1 n) • Potassium iodide 0.3-0.5 g (powder) • Thiosulphate (0.1 n) • Starch solution (1%)
1st titration stage H_2O_2	▶ Add 20 ml sulphuric acid to the sample of the water being measured. ▶ Stirring continuously, titrate with potassium permanganate until the sample colour turns faintly violet. ▶ Make a note of the consumption (A) of potassium permanganate in ml.		
2nd titration stage PAA	▶ After the 1st titration stage, add potassium iodide. ▶ Stirring continuously, titrate with thiosulphate until the sample colour turns pale yellow. ▶ Add 2 ml starch solution. ➥ The sample colour turns blue.		

	▶ Stirring continuously, titrate with thiosulphate until the sample turns colourless. ▶ Make a note of the consumption (B) of thiosulphate in ml.		
Calculation of the H_2O_2	A * 6.8 = concentration in ppm H_2O_2	A * 68 = concentration in ppm H_2O_2	A * 340 = concentration in ppm H_2O_2
Calculation of the PAA	B * 15.2 = concentration in ppm PAA	B * 152 = concentration in ppm PAA	B * 760 = concentration in ppm PAA

Reiss GmbH
Electrochemical measuring equipment
Eisleber Str. 5
D - 69469 Weinheim